Measuring Space Radiation with the Angle Detecting Inclined Sensor (ADIS) Method

J.J. Connell, C. Lopate and R.B. McKibben
Space Science Center
Institute for the Study of Earth, Ocean and Space
and Department of Physics
University of New Hampshire
Durham, NH 03824

Measuring Energetic Ions in Space

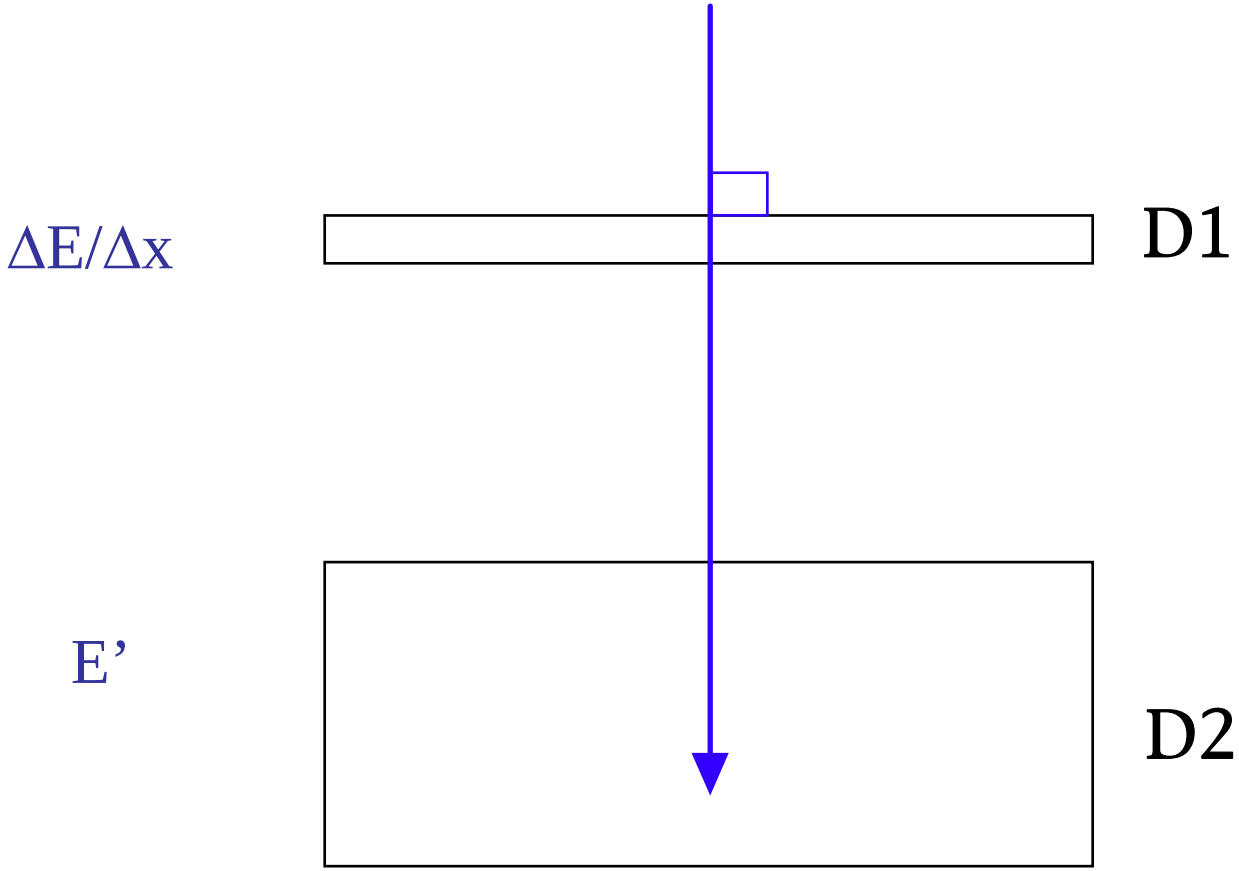

ΔE/Δx versus residual energy (E')

IMP-4 Telescope (circa 1967)

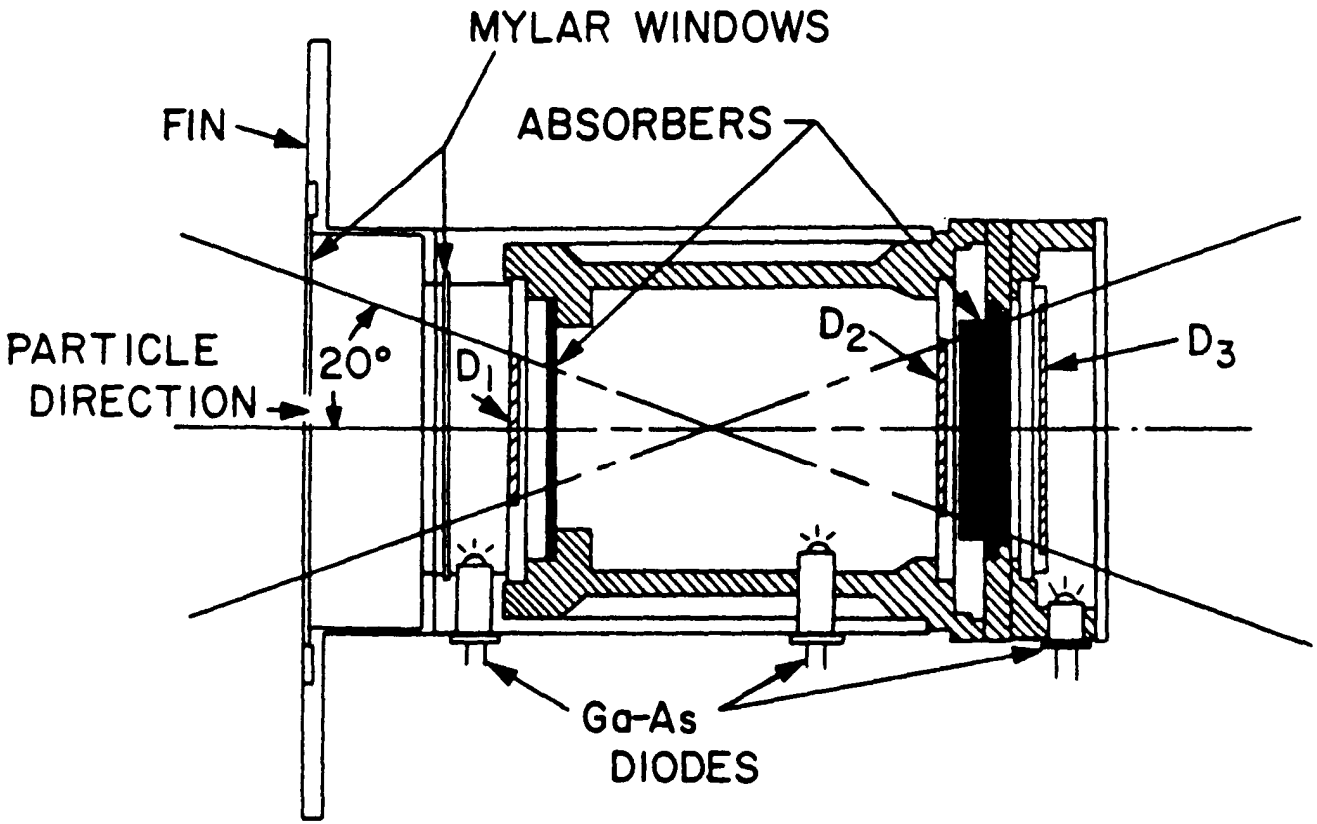

Fig. VI-2. Cross section of telescope showing sensors

Measuring Energetic Ions in Space

$\Delta E/\Delta x$

but

$\Delta x \sim \sec(\theta)$

$E' = E'$

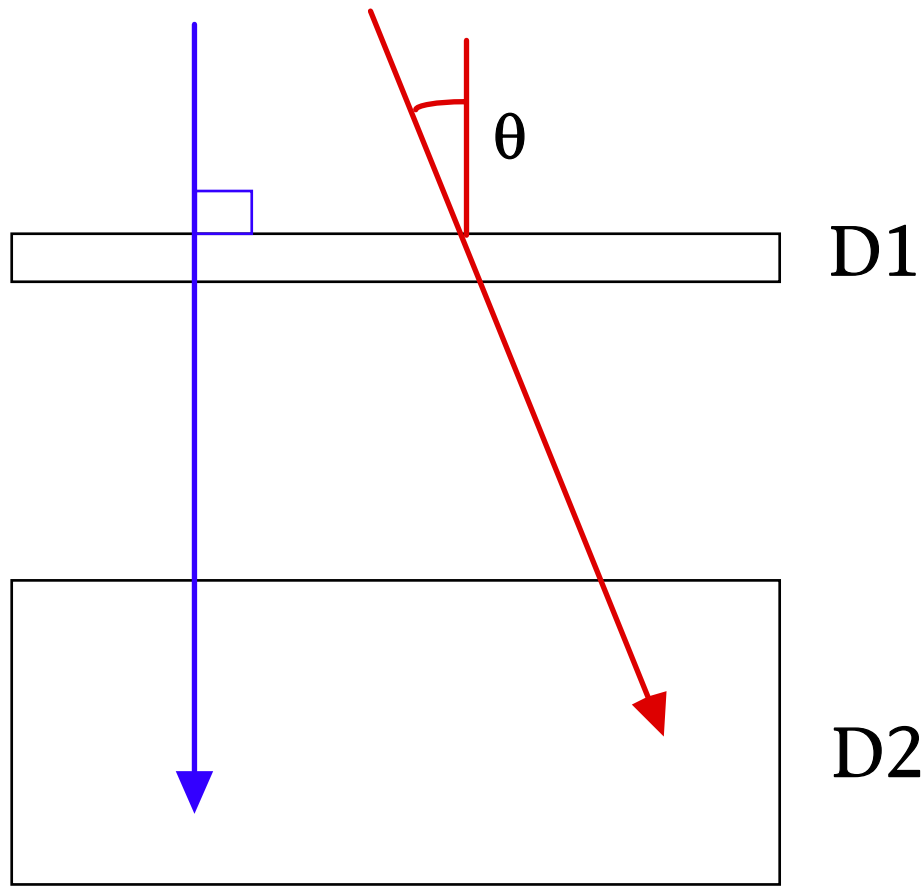

$\Delta E/\Delta x$ versus residual energy (E')

Charge resolution improved by using curved detectors

Curved detectors reduce the variations in thickness with angle of incidence

Used on IMP-6, 7 & 8
Pioneer-10 & 11
Voyager-1 & 2

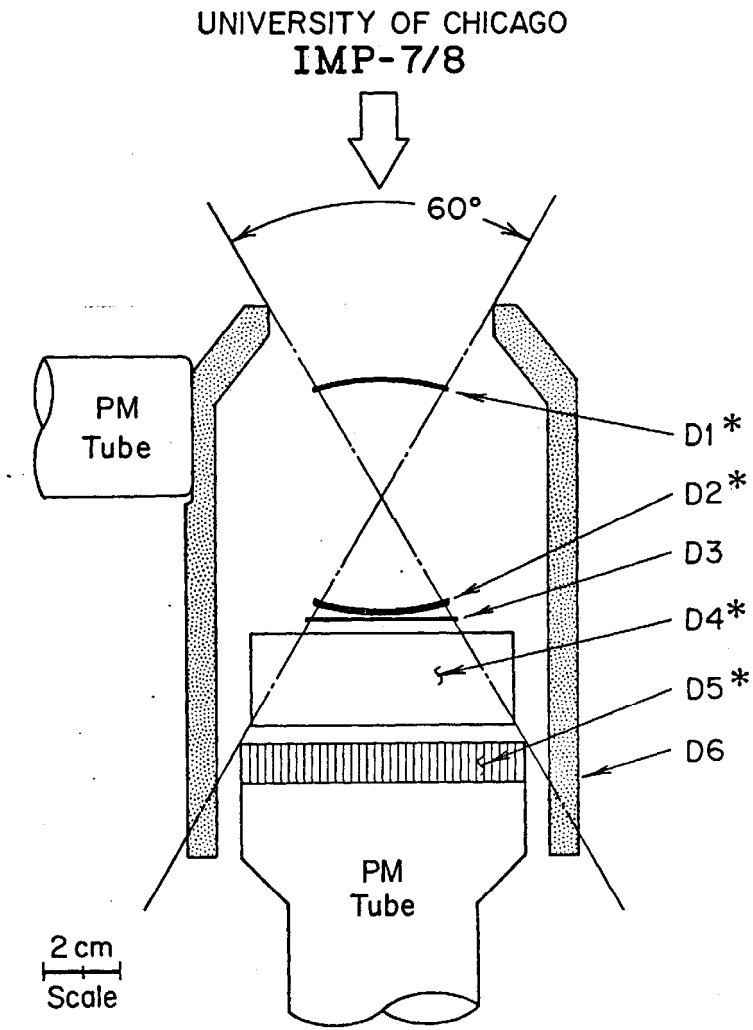

Ulysses High Energy Telescope (HET)

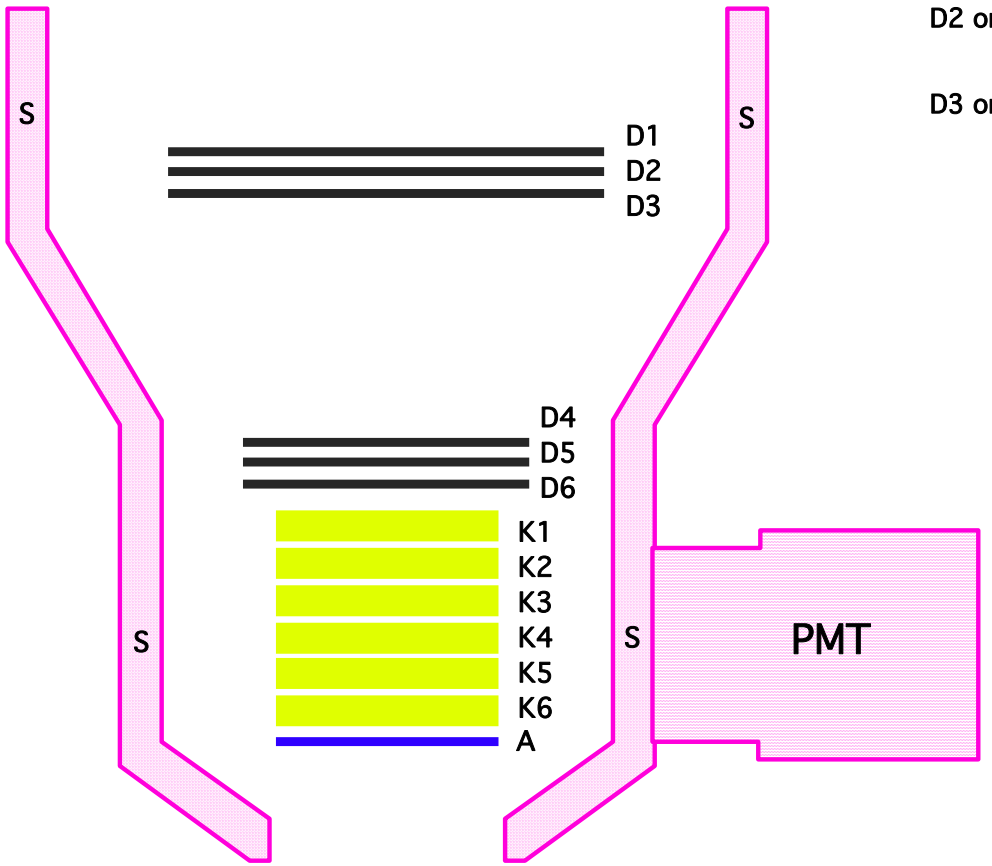

Orientation of Detector Position Sensing Strips

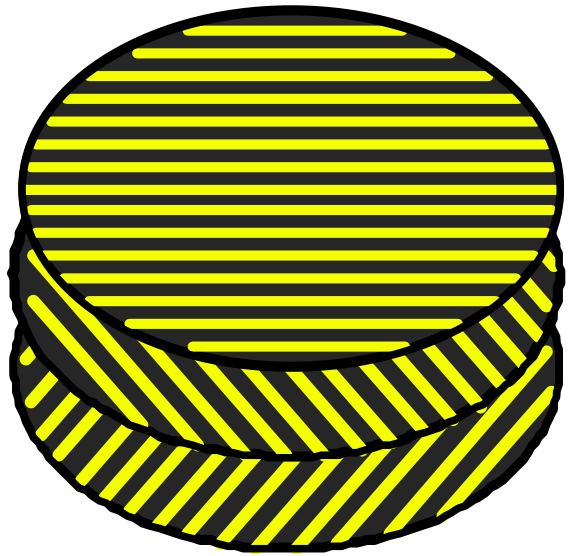

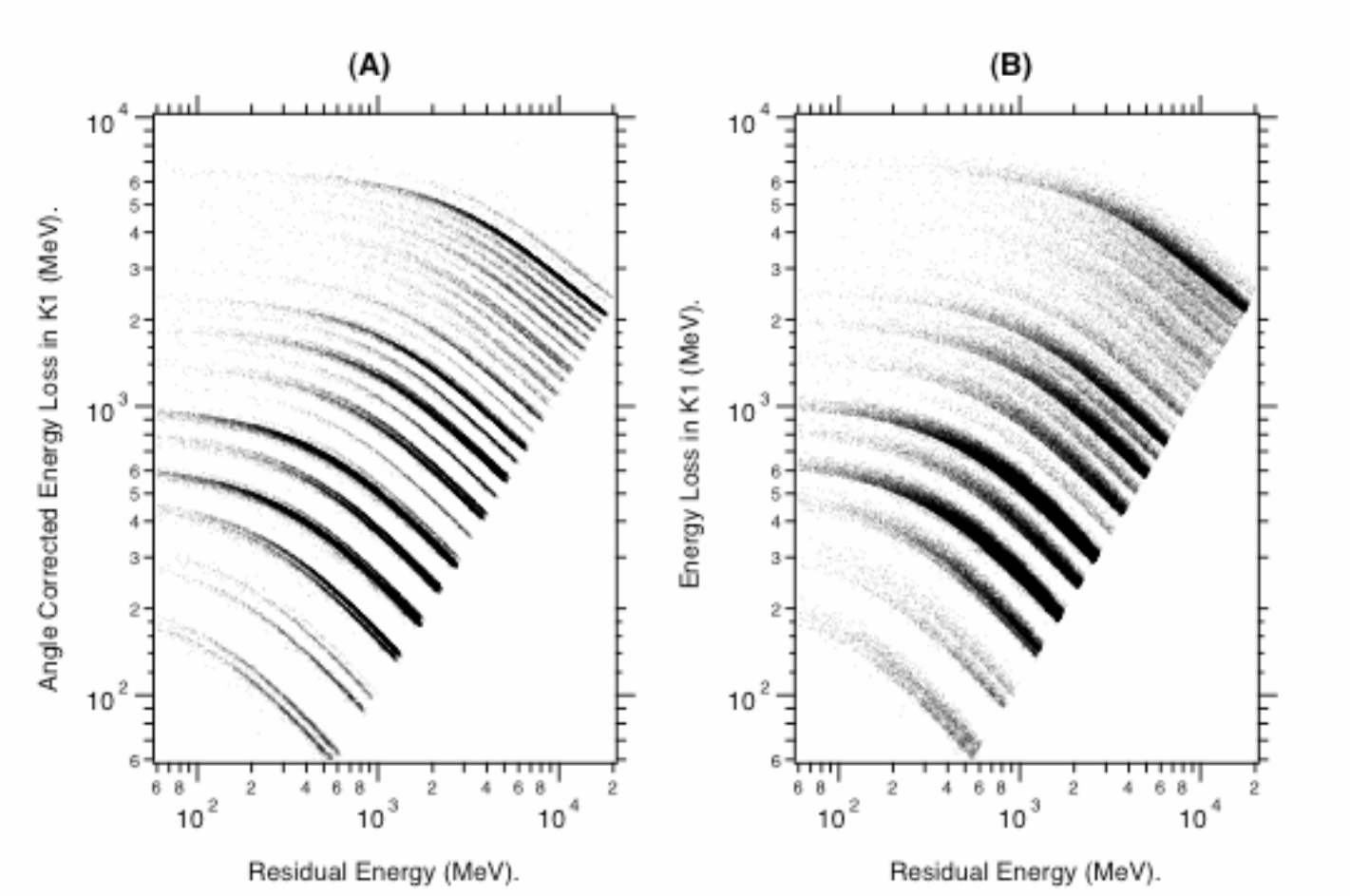

Ulysses HET flight data with (A) and without (B) correcting for particle angle of incidence—corrections need to identify elements.

Angle Detecting Inclined Sensor (ADIS)

Different geometry in telescope stack

Uses standard Si detector technology

Low risk

Low mass

Low power

On-board event processing possible

Tested at an accelerator, and it works!

ADIS Concept

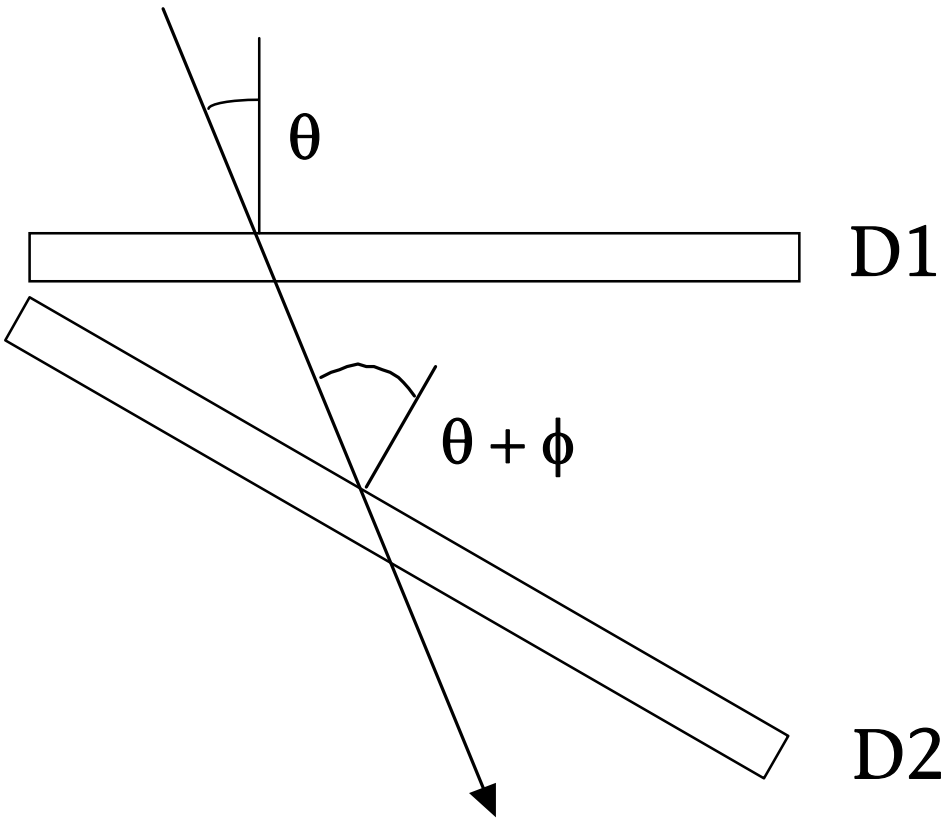

$$\frac{E_1}{E_2} = \frac{\sec(\theta)}{\sec(\theta + \phi)}$$

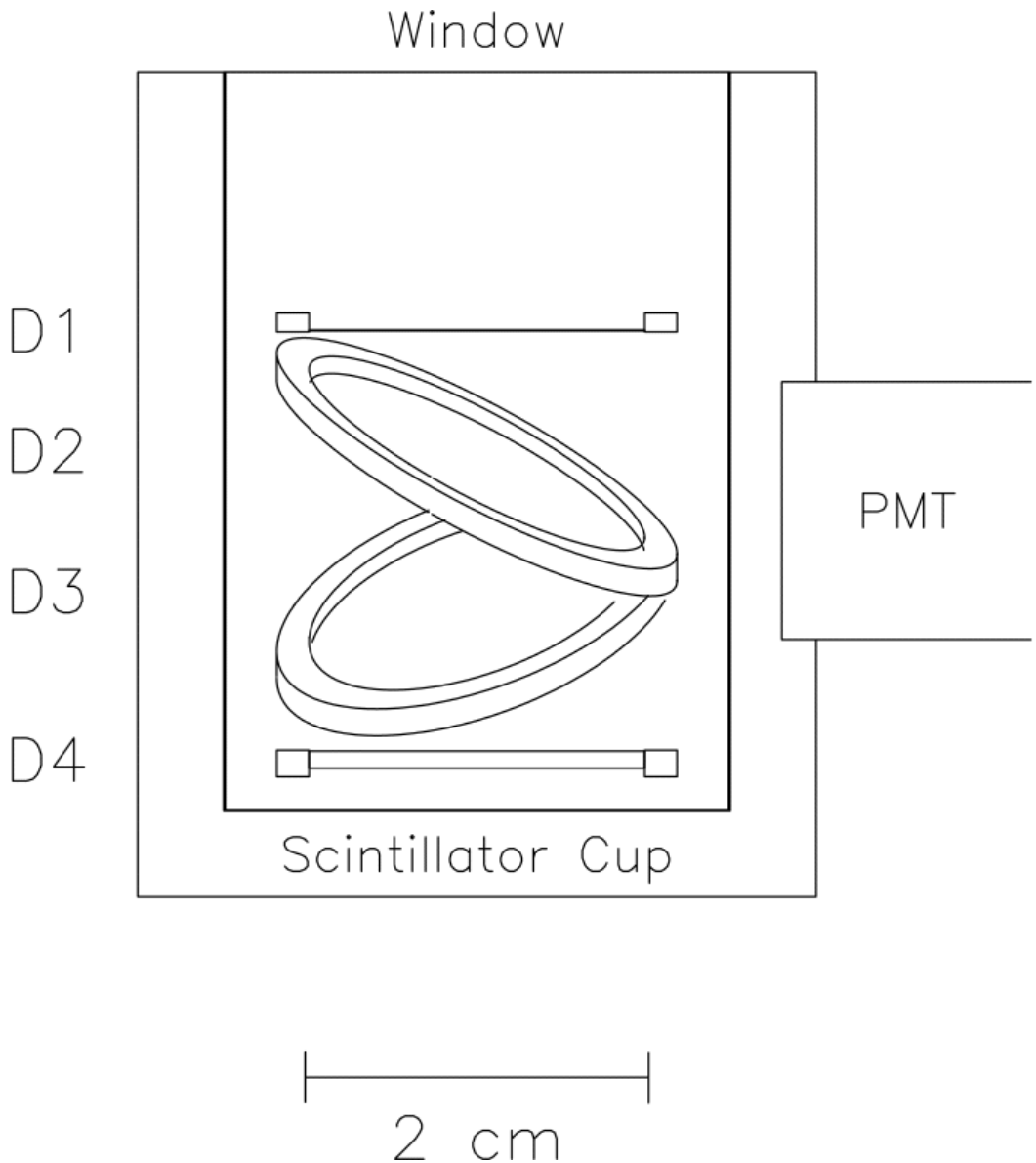
Window
D1
D2
D3
D4
PMT
Scintillator Cup
2 cm

Simplest ADIS instrument just uses four solid state detectors.

Can add detectors for specific applications.

Not limited to solid state detectors.

Can add others below:

Scintillator for thicker detector (as on IMP).

Cherenkov to extend energy range.

If you approximate the range of a ion as a power law:

$$R = \kappa_0 \frac{A}{Z^2}\left(\frac{E}{A}\right)^{\alpha}$$

$$= \kappa_0 \frac{1}{Z^2 A^{\alpha - 1}} E^{\alpha}$$

(Basis of charge and mass analysis for *Ulysses* HET)

$$D_x = 2\,\frac{T_2}{T_1}\left[\frac{(E_4 + E_3 + E_2 + E_1)^{\alpha} - (E_4 + E_3 + E_2)^{\alpha}}{(E_4 + E_3 + E_2)^{\alpha} - (E_4 + E_3)^{\alpha}}\right] - \sqrt{3}$$

$$D_y = 2\,\frac{T_3}{T_1}\left[\frac{(E_4 + E_3 + E_2 + E_1)^{\alpha} - (E_4 + E_3 + E_2)^{\alpha}}{(E_4 + E_3)^{\alpha} - (E_4)^{\alpha}}\right] - \sqrt{3}$$

and

$$Z = \frac{\kappa}{T_1}\left[\frac{(E_4 + E_3 + E_2 + E_1)^{\alpha} - (E_4 + E_3 + E_2)^{\alpha}}{\left(1 + D_x^2 + D_y^2\right)^{1/2}}\right]^{1/(\alpha+1)}$$

Calculation simple enough to be done by on-board processor

Greatly reduces telemetry requirements

ADIS Tested with ^{48}Ca at the National Superconducting Cyclotron Laboratory

1. Instrument rotated in beams to simulate omni-directional flux in space
2. Energies varied by a moving absorber
3. Primary and fragmented beams use
4. Data taken with 50, 100 and 200 mm D1-3 detectors at 15, 30 and 45 degrees inclination
5. D2-3 detectors circular, NOT oval

Large amounts of dead material degraded performance

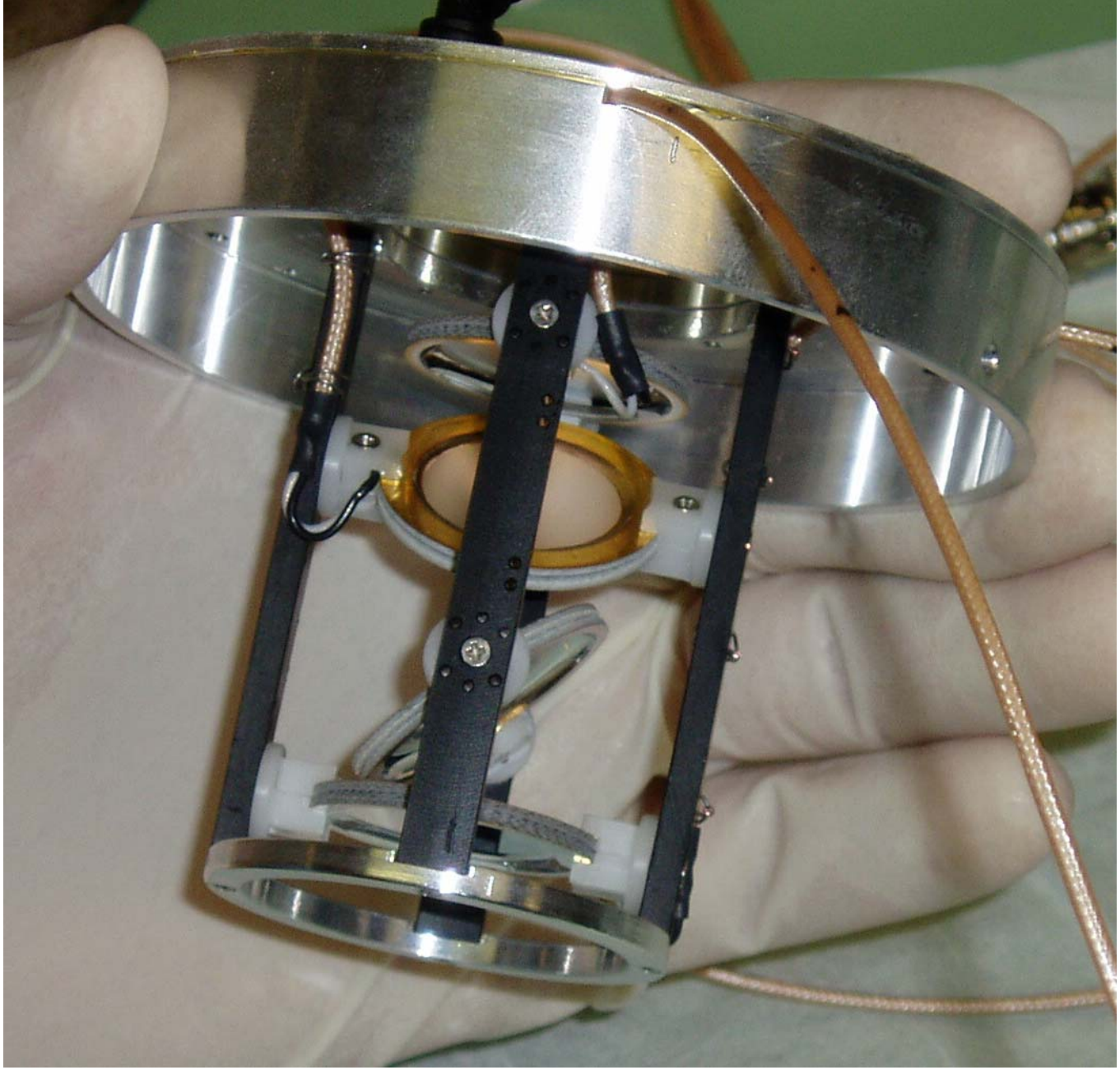

ADIS NSCL ^{48}Ca Fragment Beam D1, D2 and D3 200 μm thick 30 degree D2, D3 inclinations

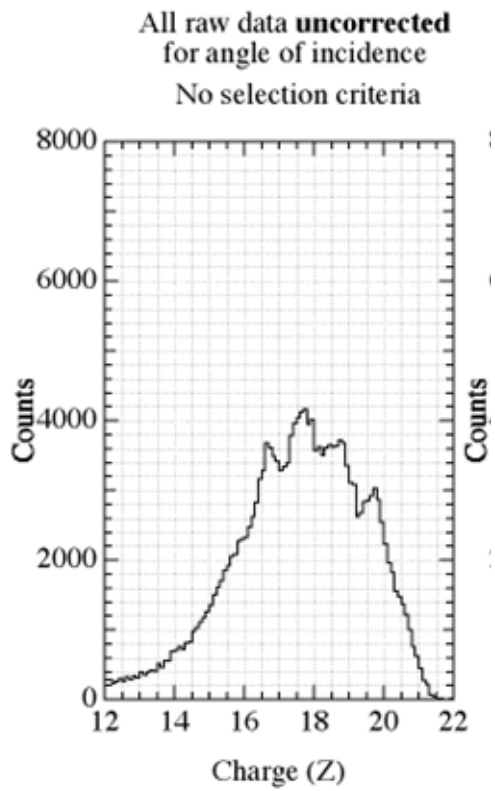

ADIS NSCL ^{48}Ca Fragment Beam D1, D2 and D3 200 μm thick 30 degree D2, D3 inclinations

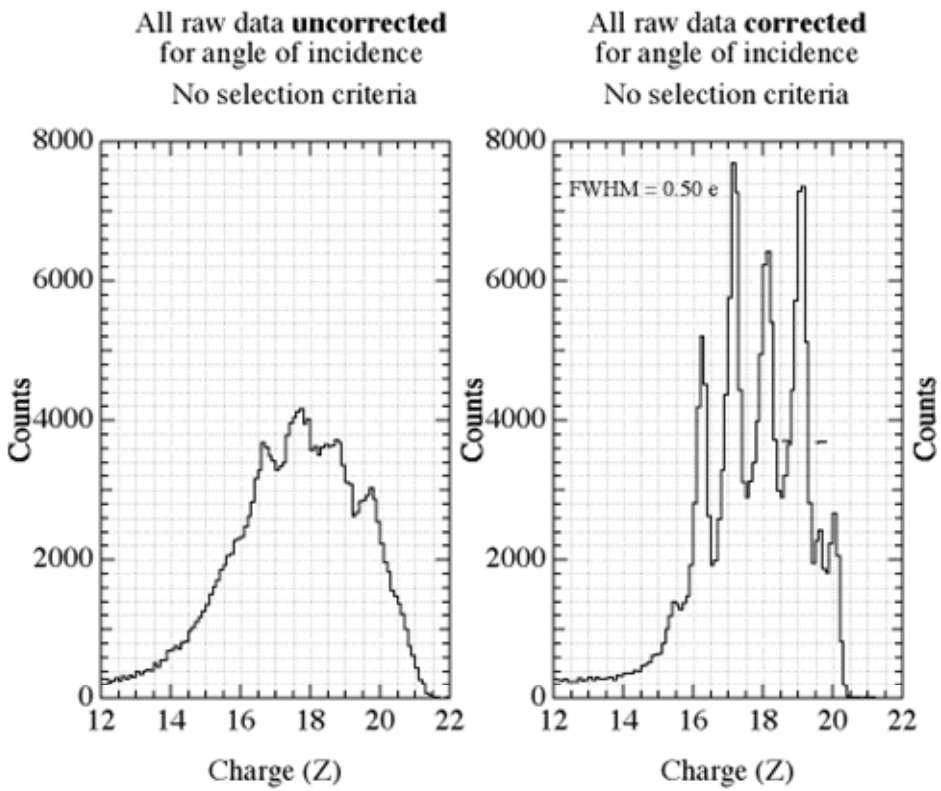

ADIS NSCL ^{48}Ca Fragment Beam D1, D2 and D3 200 μm thick 30 degree D2, D3 inclinations

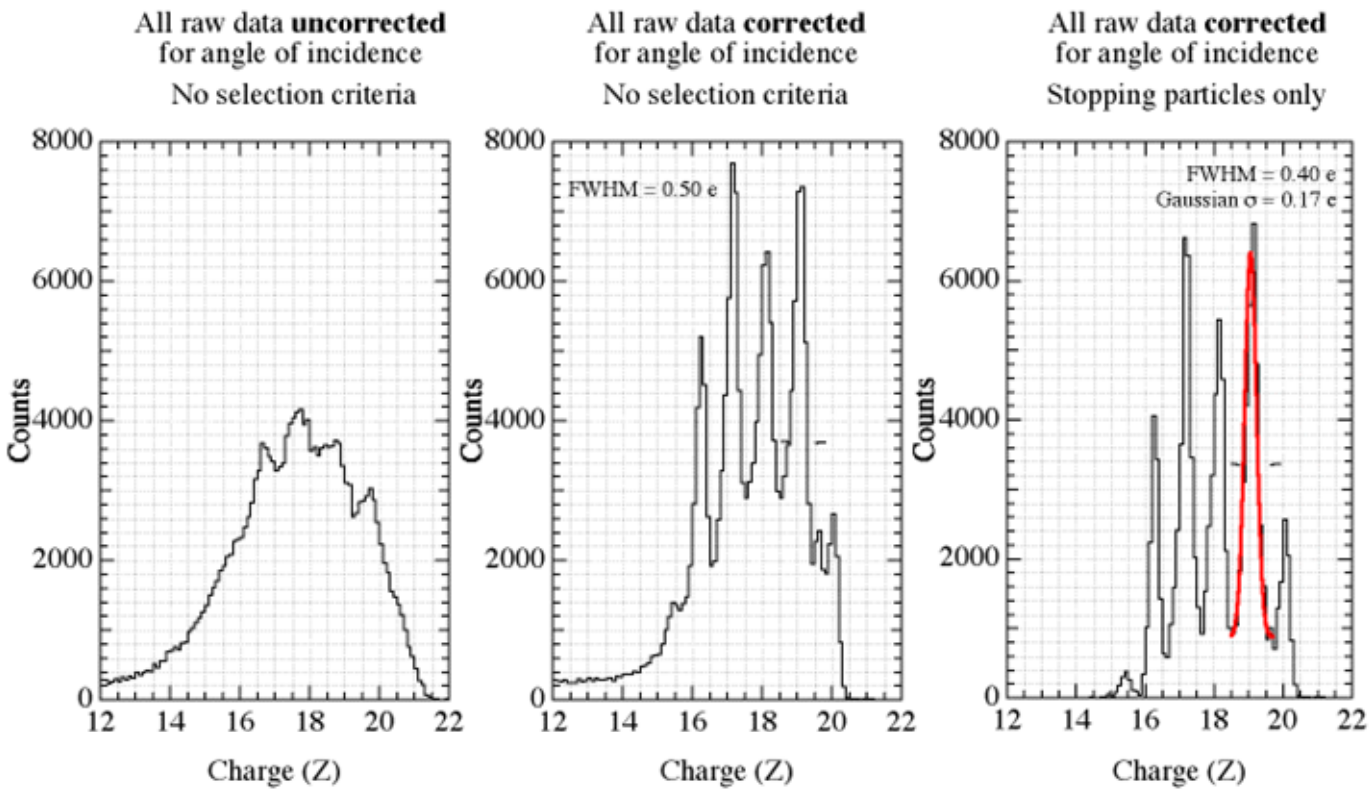

ADIS Compared to Other Instrument Architectures

System	Flight Examples	Complexity	PHA channels	Power	Risk
Curved detectors (Not made since 1970's)	IMP-8, Pioneer, Voyager	Medium	~5	~4 W	High
Segmented detectors	SOHO	High	~10	~8 W	Low
Position Sensing detectors	Ulysses, CRRES, ACE/SIS	Very High	18 20 >500	4.5 W 6 W 18 W	Low
ADIS		Low	~5	~4 W	Low

An ADIS based Instrument had been selected for the High Energy Particle Sensor (HEPS) for NPOESS

The High Energy Particle Sensor (HEPS) will be a component of the Space Environment Sensor Suite (SESS).

The goal: A simple but capable instrument.

HEPS design draws on the heritage of earlier instruments from our group on IMP-8, *Ulysses* and CRRES.

It combines an instrument of complexity comparable to our IMP-8 instrument with electronics concepts used on *Ulysses* and CRRES.

The Angle Detecting Inclined Sensor (ADIS) system provides good charge resolution without the complexity of position sensing detectors.

The High Energy Particle Sensor (HEPS)

Fluxes of H ions in six logarithmic energy intervals from 10 to ~320 MeV/u plus a seventh integral flux.

Fluxes of He ions in three logarithmic energy intervals from 10 to ~320 MeV/u plus a fourth integral flux.

Heavy ion fluxes through Ni at corresponding energies (but no integral) with individual charge resolution ($\sigma < 0.25$ e).

Linear Energy Transfer (LET) calculated from these data.

The geometrical factor will be ~1 cm^2-sr

HEPS is designed not to saturate at the highest fluxes of SEPs thus far observed.

HEPS will provide data on Solar Energetic Particles (SEP), Galactic Cosmic Rays (GCR) and Anomalous Cosmic Rays (ACR) as well as trapped radiation.

Present HEPS Resource Estimates are Preliminary

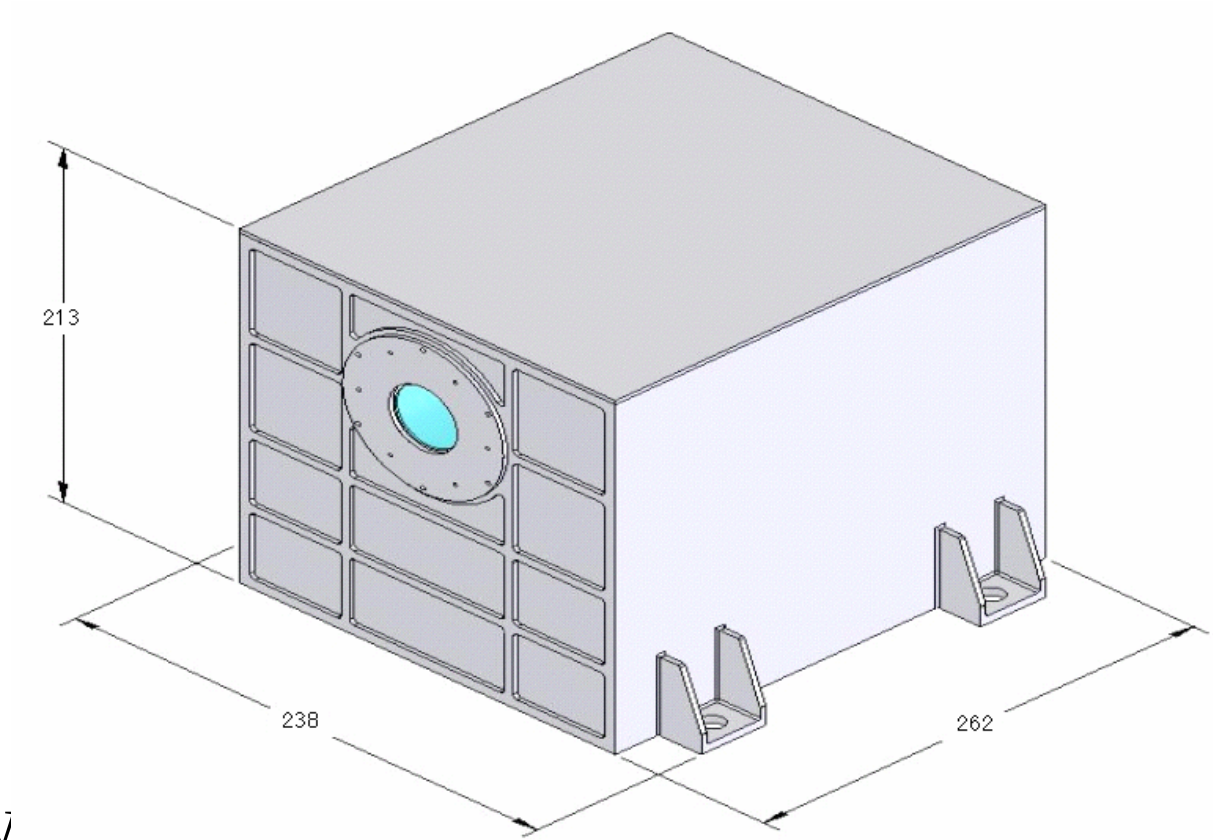

Mass: ~4 kg
Power: ~3.6 W
Telemetry: 350 bps

HEPS

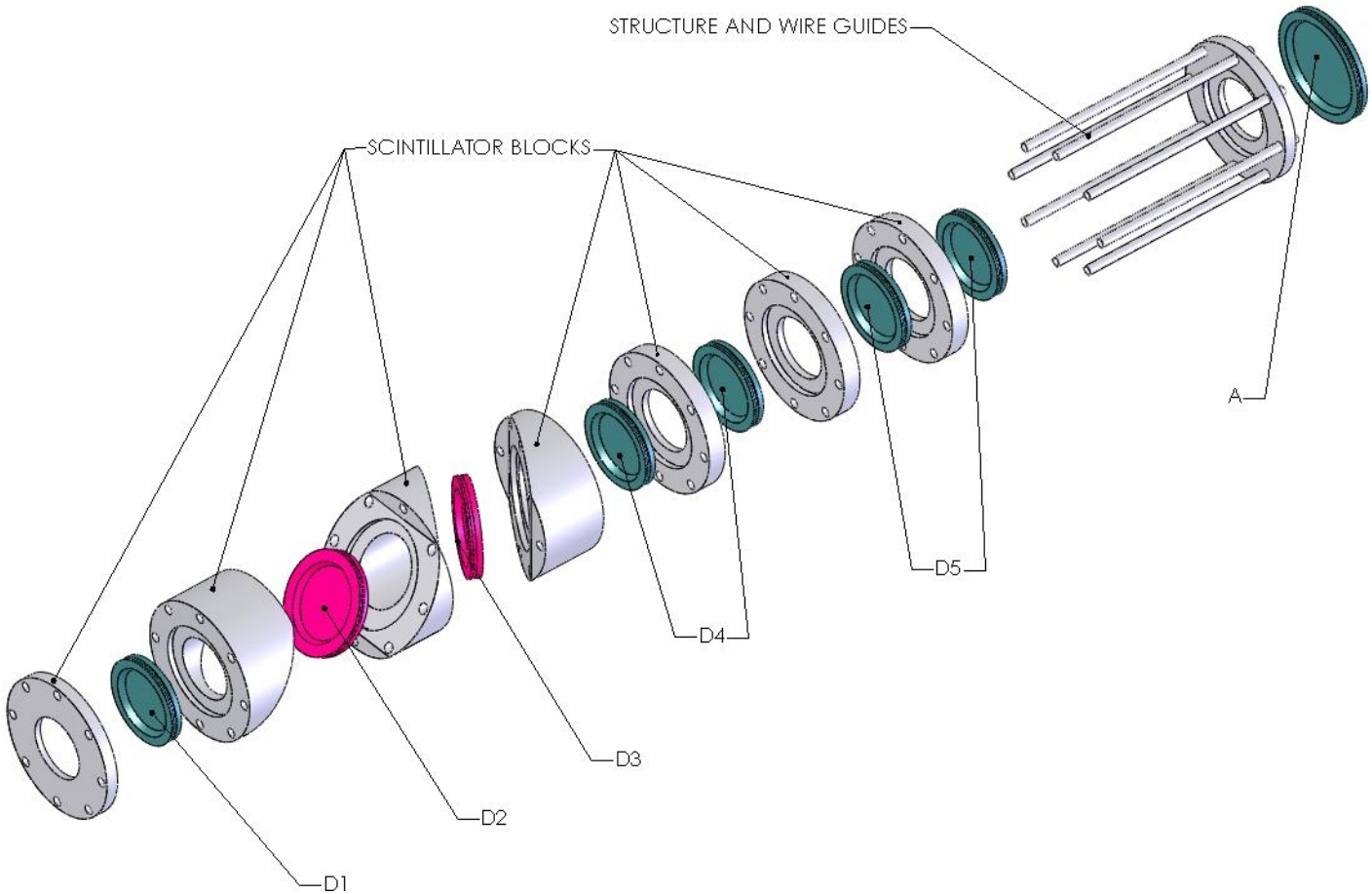
STRUCTURE AND WIRE GUIDES
SCINTILLATOR BLOCKS
A
D5
D4
D3
D2
D1

HEPS is based on the Angle Detecting Inclined Sensor (ADIS) system.

There are three thin 50 micron detectors D1, D2 and D3:

D1 is a circular detector of ~600 mm^2 area.

D2 and D3 are oval and inclined at 30 degrees.

D2 and D3 have a semi-minor axis equal to the D1 radius and semi-major axis a factor 1.155 longer.

D4 and D5 are logical detector each consisting of a pair of 2000 micron thick, 600 mm^2 detectors.

D1-D5 are pulse-height analyzed.

R is a single detector to flag penetrating particles. It is not pulse-height analyzed.

HEPS

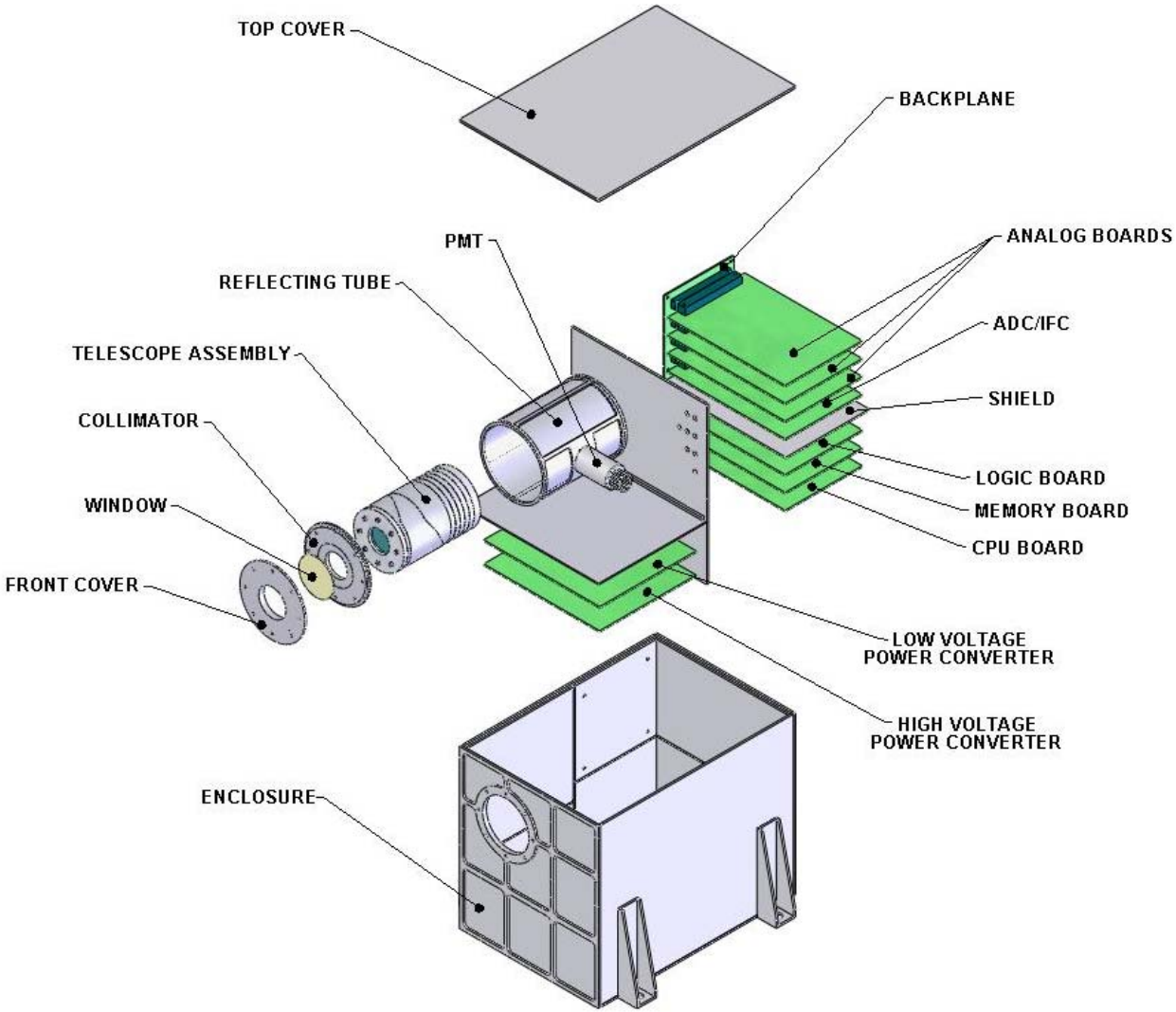
TOP COVER
BACKPLANE
PMT
ANALOG BOARDS
REFLECTING TUBE
ADC/IFC
TELESCOPE ASSEMBLY
SHIELD
COLLIMATOR
LOGIC BOARD
WINDOW
MEMORY BOARD
CPU BOARD
FRONT COVER
LOW VOLTAGE POWER CONVERTER
HIGH VOLTAGE POWER CONVERTER
ENCLOSURE

The instrument will be housed in a single box that includes electronics boards.

The box is divided to isolate the converter boards, the analog electronics boards and the digital electronics boards.

Board attachment is modular for relatively simple replacement.

Minimal box thickness for NPOESS is currently 0.25 cm (100mils) to reduce radiation exposure.

This would hardly be needed on a manned flight.

PRELIMINARY

HEPS SYSTEM FUNCTIONAL BLOCK DIAGRAM

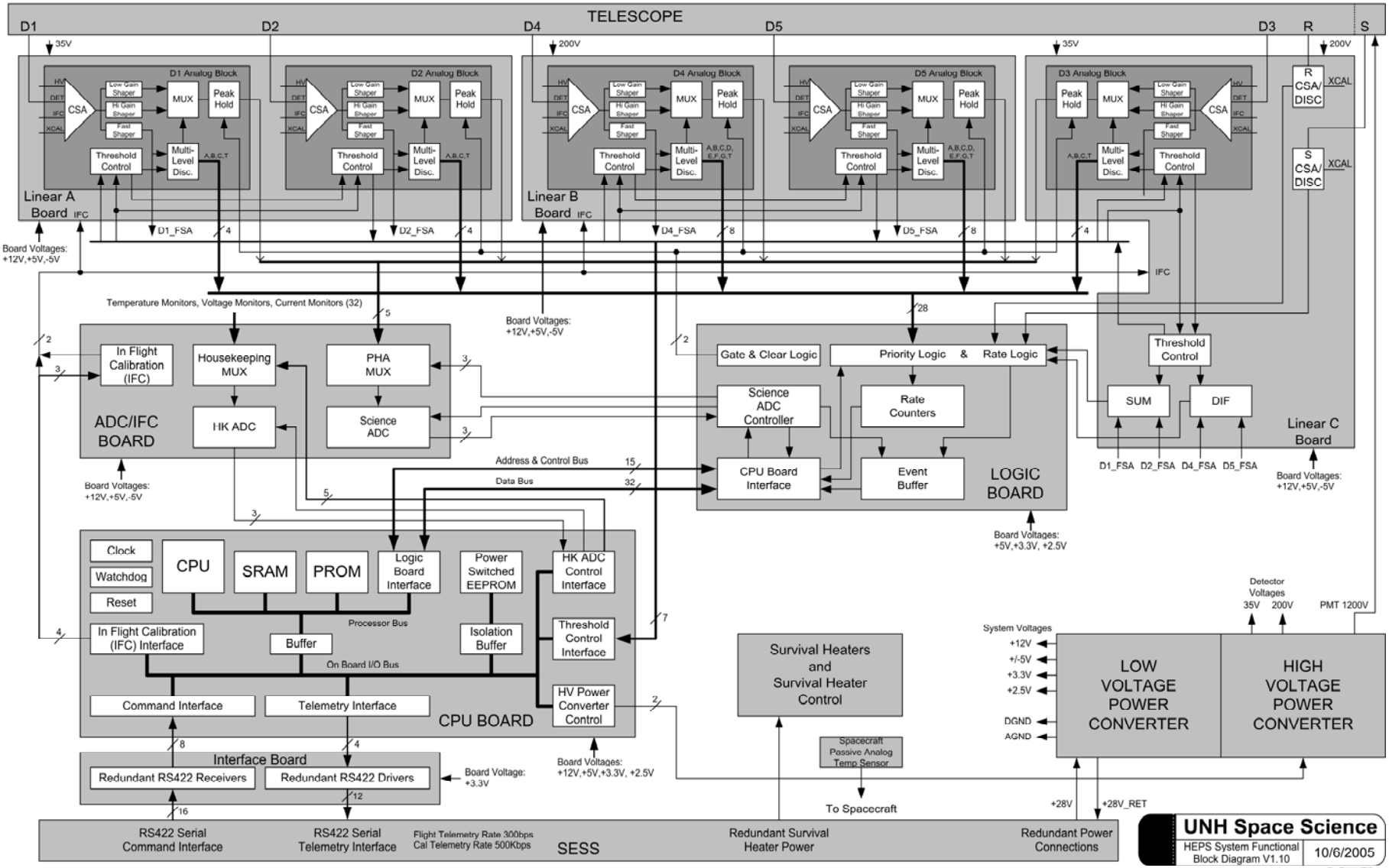

The HEPS electronics will consists of eight main boards plus a backplane motherboard

- 3 Linear boards
- 1 ADC /IFC board
- 1 Logic board
- 1 CPU board
- Power converter board
- HV board

A small I/O board supports the RS 422 interface.

HEPS uses the standard approach of combining discriminator based logic rates with pulse height analysis of a sample of events to determine fluxes for the measured species.

Priority system used to give preference to heavy ion species for PHA.

On-board analysis means relatively large sample of PHA events: 1000's identified per second.

HEPS does not measure electrons, but logic could be added to give electron measurements as in *Ulysses* and IMP-8. Energy range would be ~0.5 to ~10 MeV.

PRELIMINARY HEP

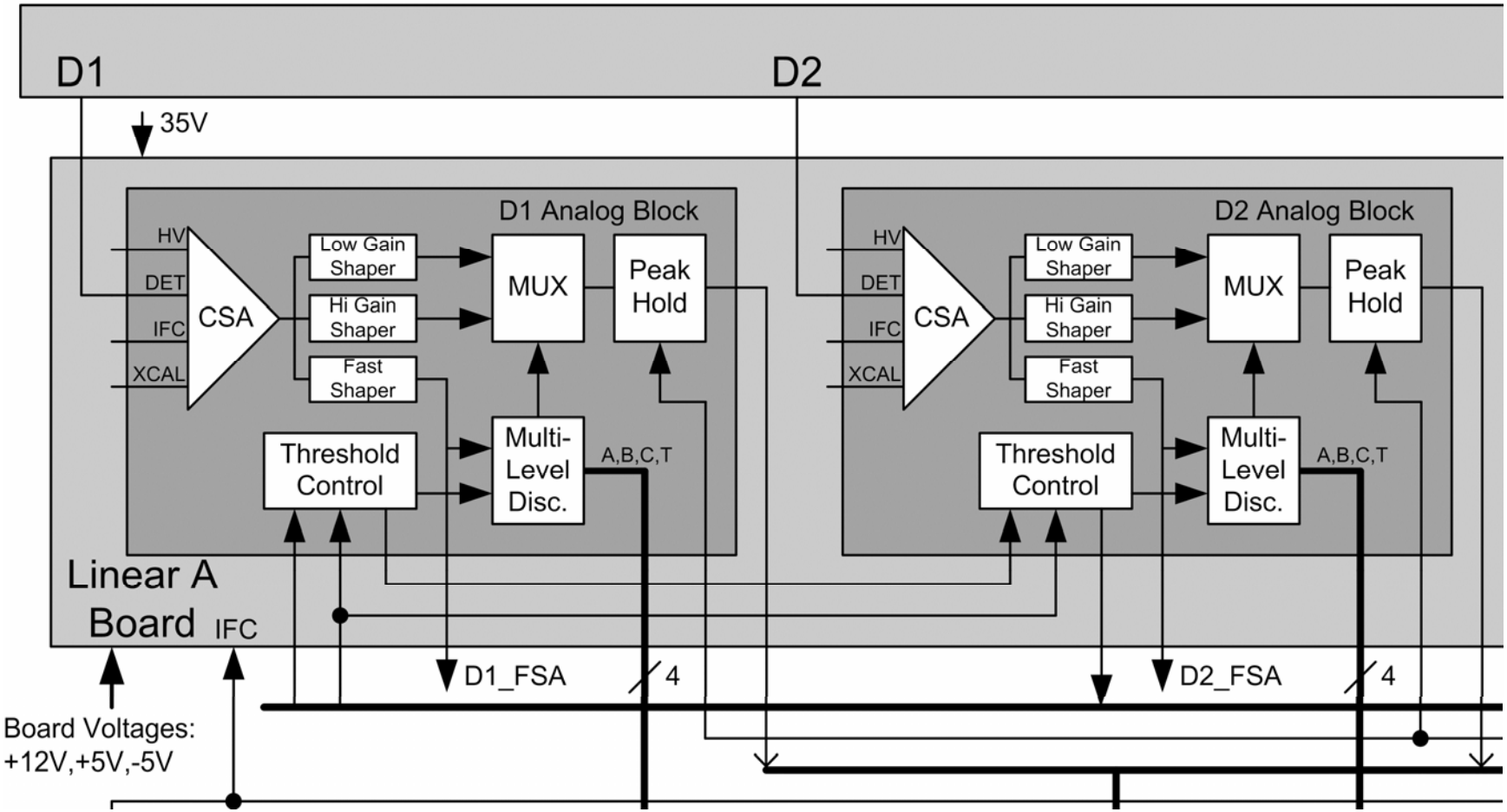

Two slower amps are used for events that will be pulse height analyzed.

Because of the large dynamic range of the signals (~7000) there is both a high gain and a low gain shaping amplifier. These feed via an analog mux to a peak detect sample and hold (PDSH).

The highest level discriminator determines which amplifier (the high or low gain) feeds the sample and hold.

Thus, small signals are processed through the high gain amp while large signals are processed through the low gain amp.

ADIS

Simple

Capable

A Phoswich-based Detector for Fast (~0.5-10 MeV) Neutrons

R.B. McKibben, J.M. Ryan, J.J. Connell, and J.R. Macri
Space Science Center
Institute for the Study of Earth, Ocean and Space
and Department of Physics
University of New Hampshire
Durham, NH 03824

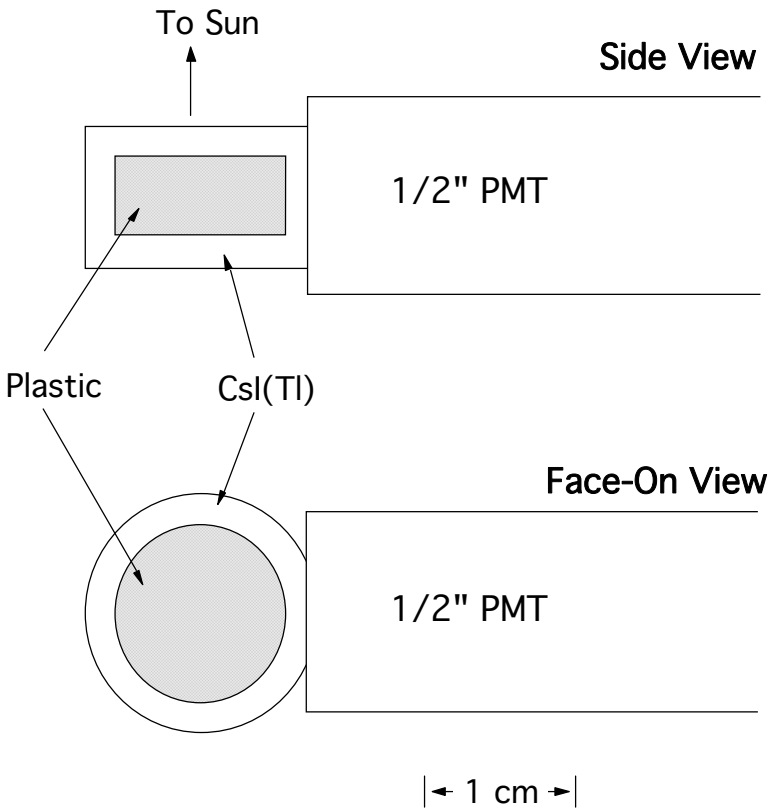
To Sun
Side View
1/2" PMT
Plastic
CsI(Tl)
Face-On View
1/2" PMT
1 cm

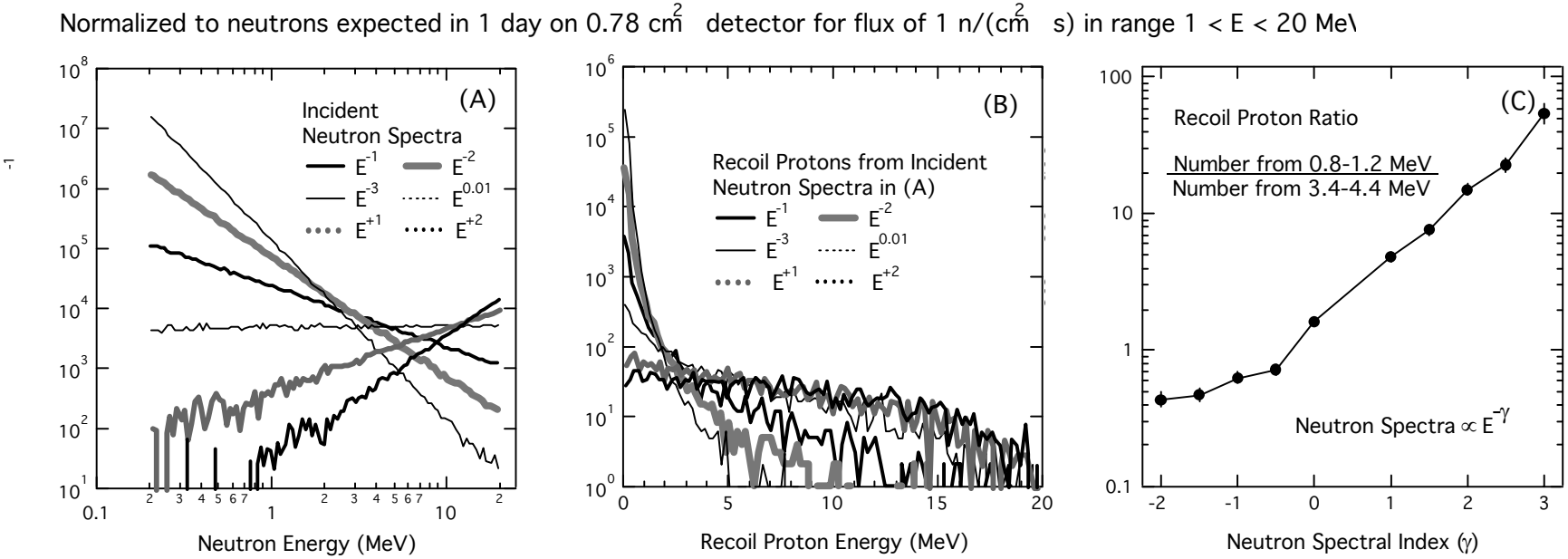

A) Incident neutron spectra. B) Energy distribution of recoil protons in the detector from spectra in (A), C) Ratio of numbers of recoil protons in two energy bands vs. spectral index of incident neutrons.

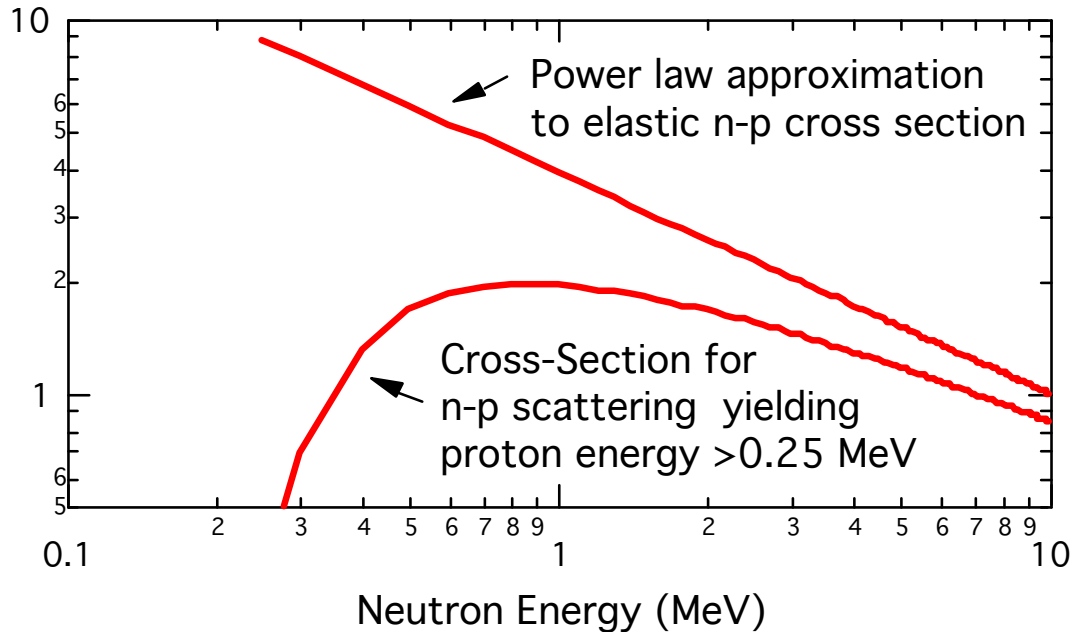

Scattering cross-section and effective cross-section for producing a >0.25 MeV recoil proton

A Phoswich-based Detector offers the potential for a very simple, low mass, low power monitor for neutrons.